USA:
NuVasive, Inc.
7475 Lusk Boulevard
San Diego, CA 92121, USA
Phone: +1-800-475-9131

NUVASIVE

EC REP
Europe:
NuVasive Netherlands B.V.
Jachthavenweg 109A
1081 KM Amsterdam
The Netherlands
Phone: +31 20 72 33 000

CE

Nav.S Vuepoint II Drill Guide – Dismantlable (D8801613)

SUPPLEMENTAL INSTRUCTIONS

(Zusatzanweisungen/ Instructions Complémentaires/ Συμπληρωματικεσ Οδηγιεσ/ Instrucciones Complementarias/ Istruzioni Supplementari/ Instruções Adicionais/ Tamamlayici Talimatlar/ Aanvullende Instructies/ Instrukcje Dodatkowe)

Disassemble:

(Demontage/ Démontage/ Αποσυναρμολογηση/ Desarmado/ Smontaggio/ Desmontagem/ Sökme/ Demonteren/Demontaż)

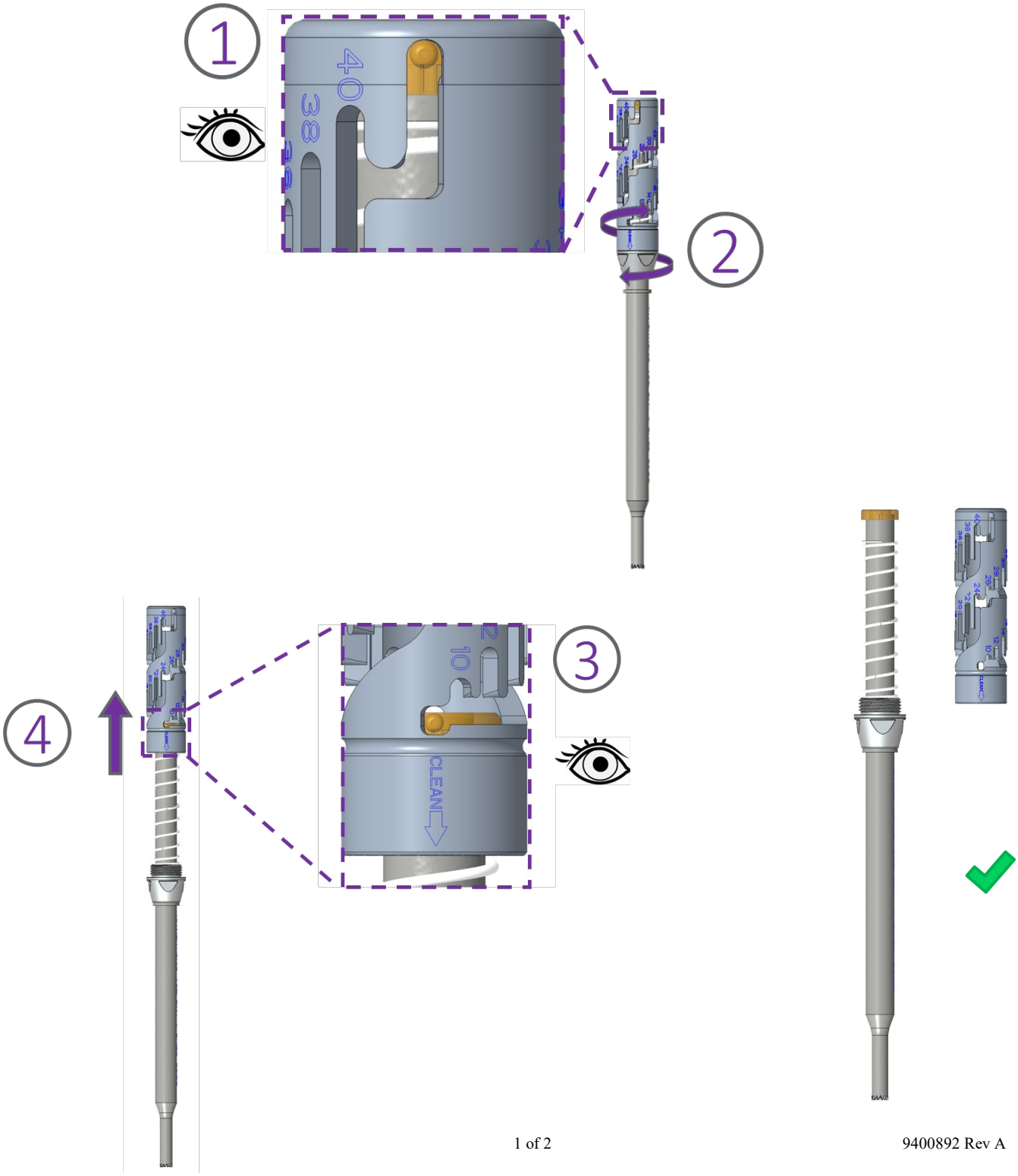

ASSEMBLE/REASSEMBLE:
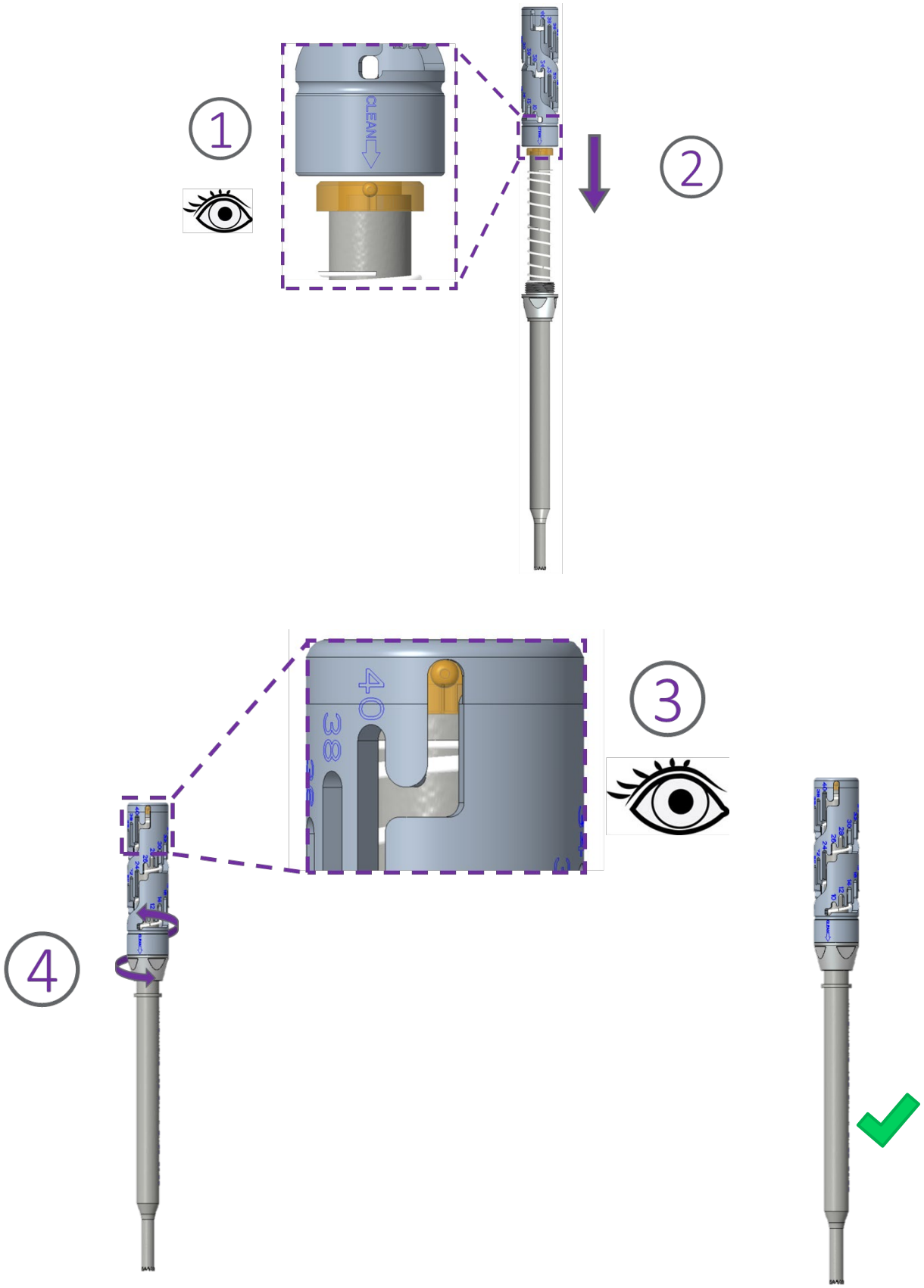
(ZUSAMMENBAU/ERNEUTER ZUSAMMENBAU, MONTAGE/REMONTAGE, ΣΥΝΑΡΜΟΛΟΓΗΣΗ/ΕΠΑΝΑΣΥΝΑΡΜΟΛΟΓΗΣΗ, ARMADO/REARMADO, MONTAGGIO/RIMONTAGGIO, MONTAGEM/NOVA MONTAGEM, BIRLEŞTIRME/YENIDEN BIRLEŞTIRME, MONTEREN/HERMONTEREN, MONTAŻ/PONOWNY MONTAŻ)