**USA:**
**NuVasive, Inc.**
**7475 Lusk Boulevard**
**San Diego, CA 92121**
**Phone: 1 800 475-9131**

**EC REP**
**Europe:**
**NuVasive Netherlands B.V.**
**Jachthavenweg 109A**
**1081 KM Amsterdam**
**The Netherlands**
**Phone: +31 20 72 33 000**

# *BASE Angled Driver – Dismantlable (D6957100)*

## SUPPLEMENTAL INSTRUCTIONS

(Zusatzanweisungen /Instructions Complémentaires /Συμπληρωματικες Οδηγιες /Instrucciones Complementarias / Istruzioni Supplementari /Instruções Adicionais /Tamamlayici Talimatlar /Aanvullende Instructies)

**DISASSEMBLE:**

(Demontage /Démontage /Αποσυναρμολογηση /Desarmado /Smontaggio /Desmontagem /Sökme /Demonteren)

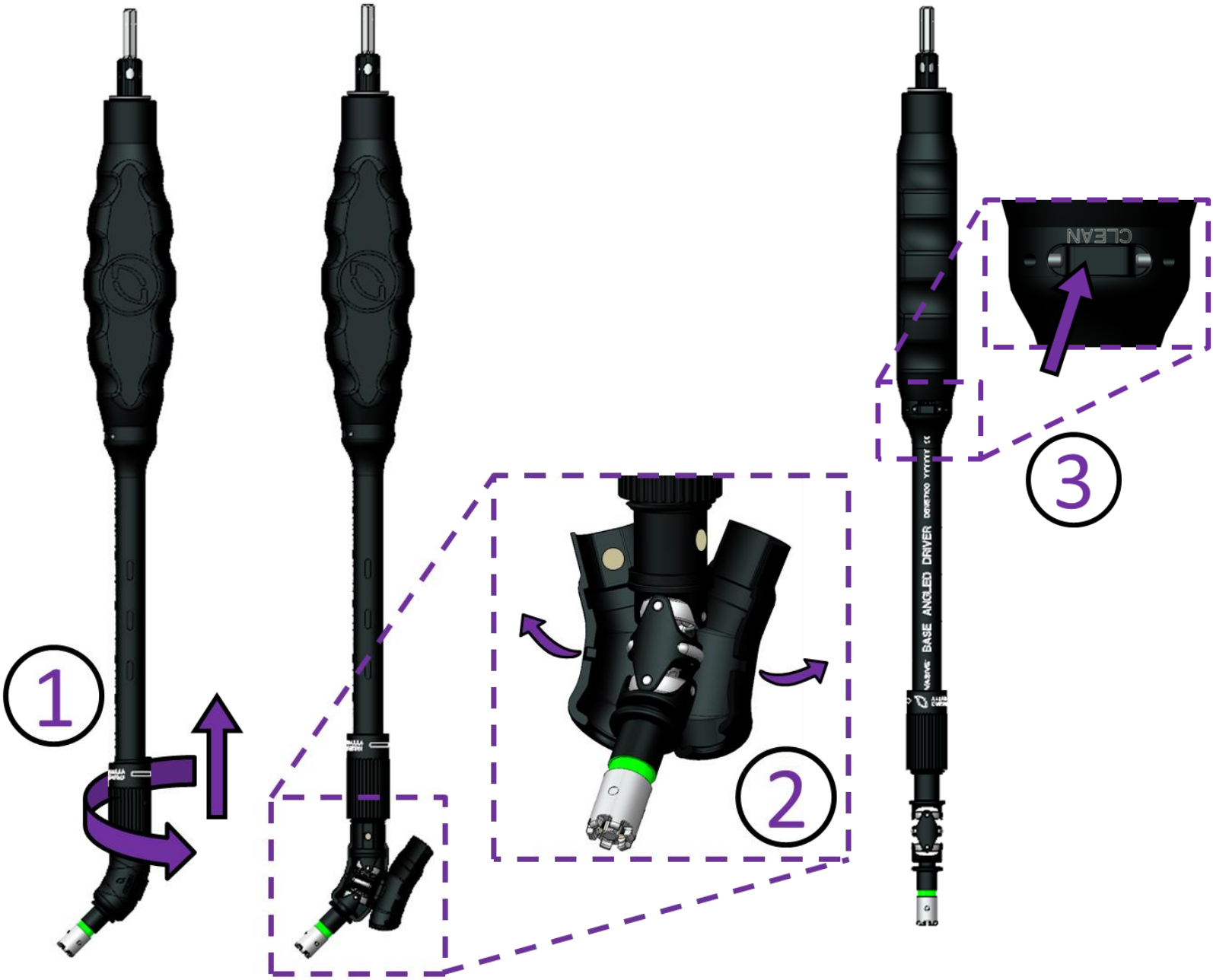

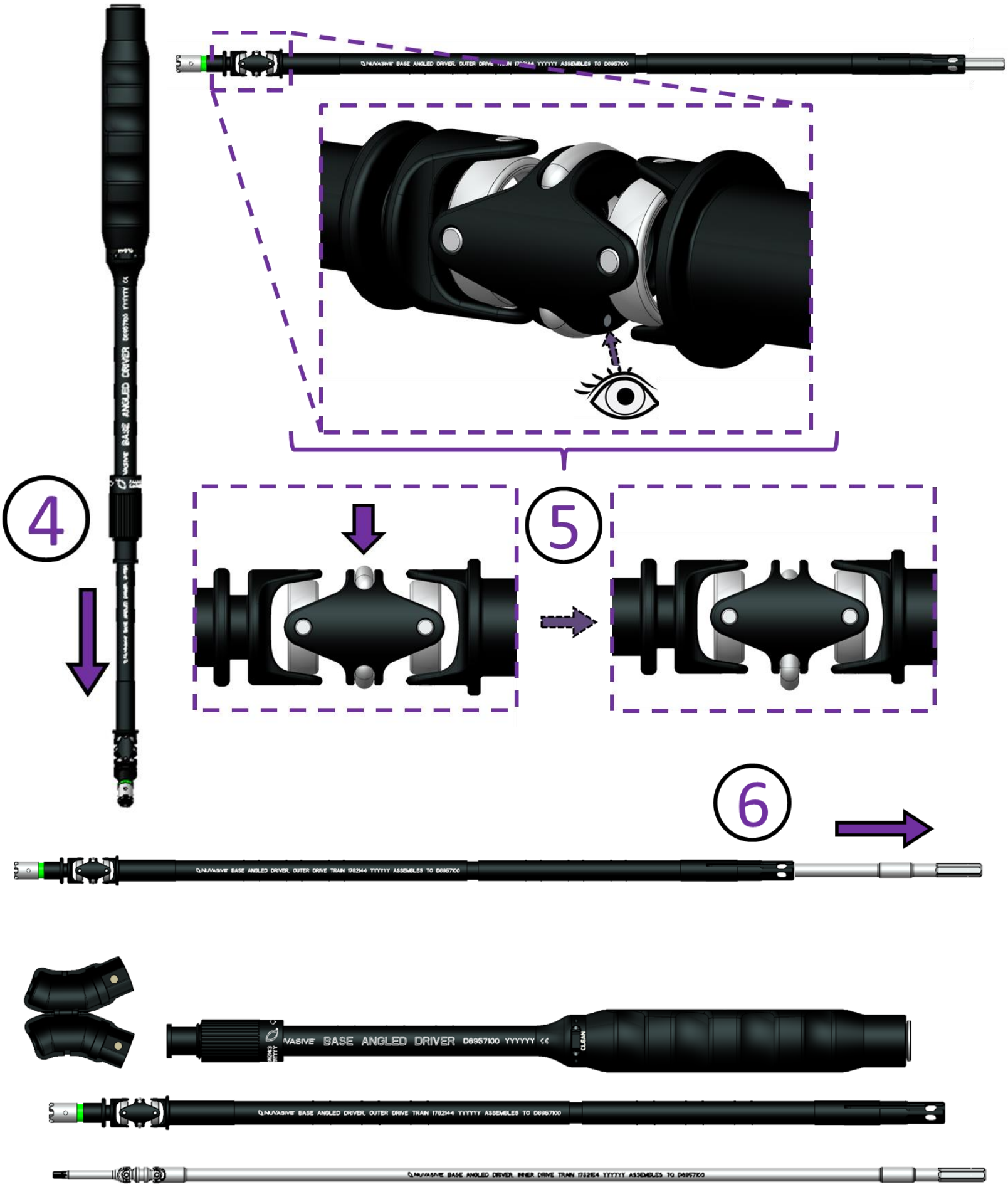
4
5
6
BASE ANGLED DRIVER D6957100 YYYYYY

**ASSEMBLE/REASSEMBLE:**
(ZUSAMMENBAU/ERNEUTER ZUSAMMENBAU, MONTAGE/REMONTAGE, ΣΥΝΑΡΜΟΛΟΓΗΣΗ/ΕΠΑΝΑΣΥΝΑΡΜΟΛΟΓΗΣΗ, ARMADO/REARMADO, MONTAGGIO/RIMONTAGGIO, MONTAGEM/ NOVA MONTAGEM, BIRLEŞTIRME/YENIDEN BIRLEŞTIRME, MONTEREN/HERMONTEREN)

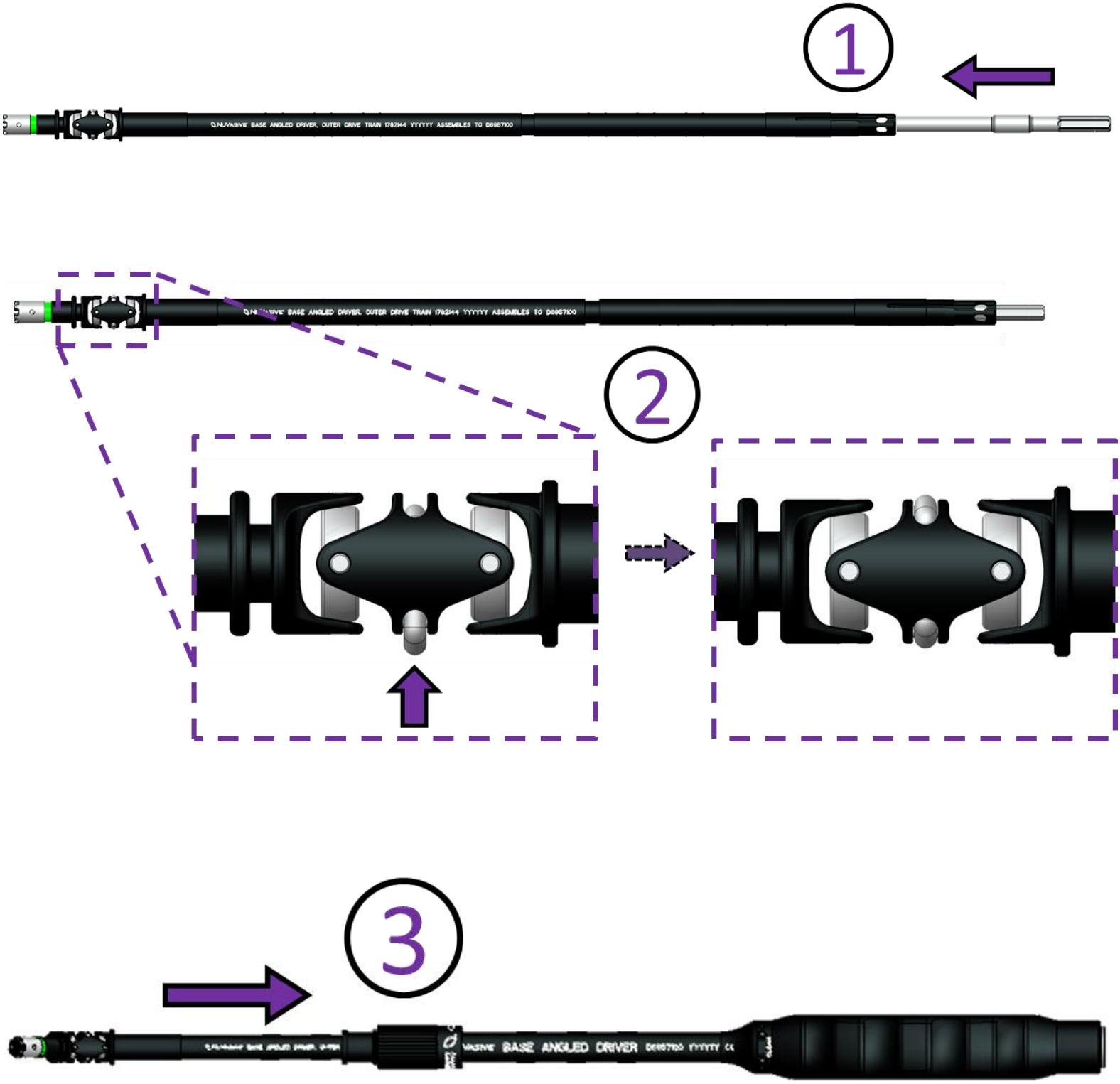

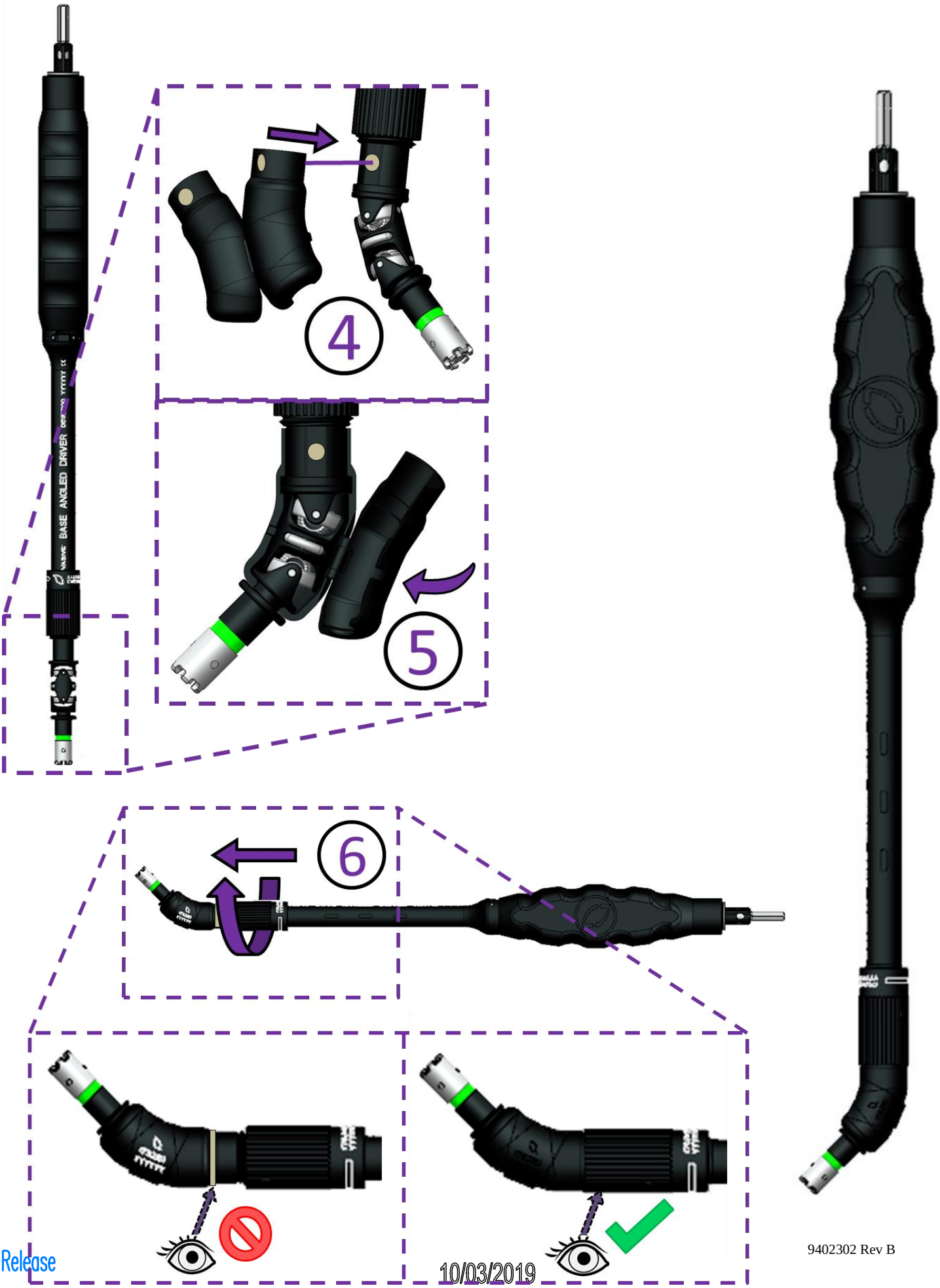


Release

10/03/2019

9402302 Rev B