USA:
NuVasive, Inc.
7475 Lusk Boulevard
San Diego, CA 92121
Phone: (800) 475-9131

EC REP
Europe:
NuVasive UK Ltd.
Suite B, Ground Floor,
Caspian House, The Waterfront,
Elstree, Herts, WD6 3BS
Phone: +44 (0) 20 8238 7850

CE

X-CORE® iVBR Inserter (D1601900) – Dismantlable (1601900, 1601913)

SUPPLEMENTAL INSTRUCTIONS

(Ergänzungsanleitung /Instructions Supplémentaires/ Συμπληρωματικεσ Οδηγιεσ/ Instrucciones Complementarias/ Istruzioni Supplementary/ Instruções Adicionais/ Ek Talimatlar)

Disassemble:
(Auseinanderbauen/ Démonter/ Αποσυναρμολογηση/ Desarmar/ Smontaggio/ Desmontagem/ Sökme)

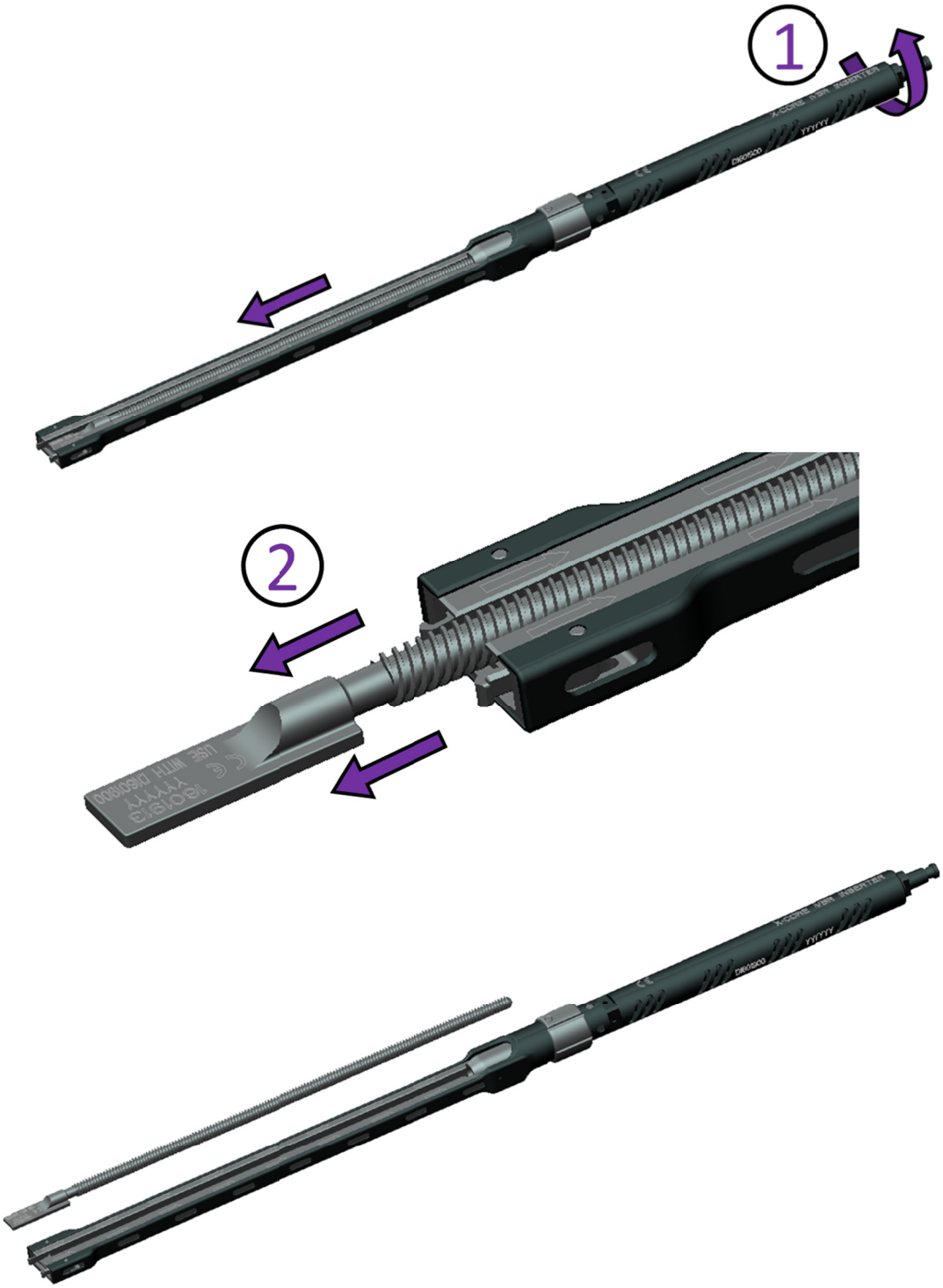
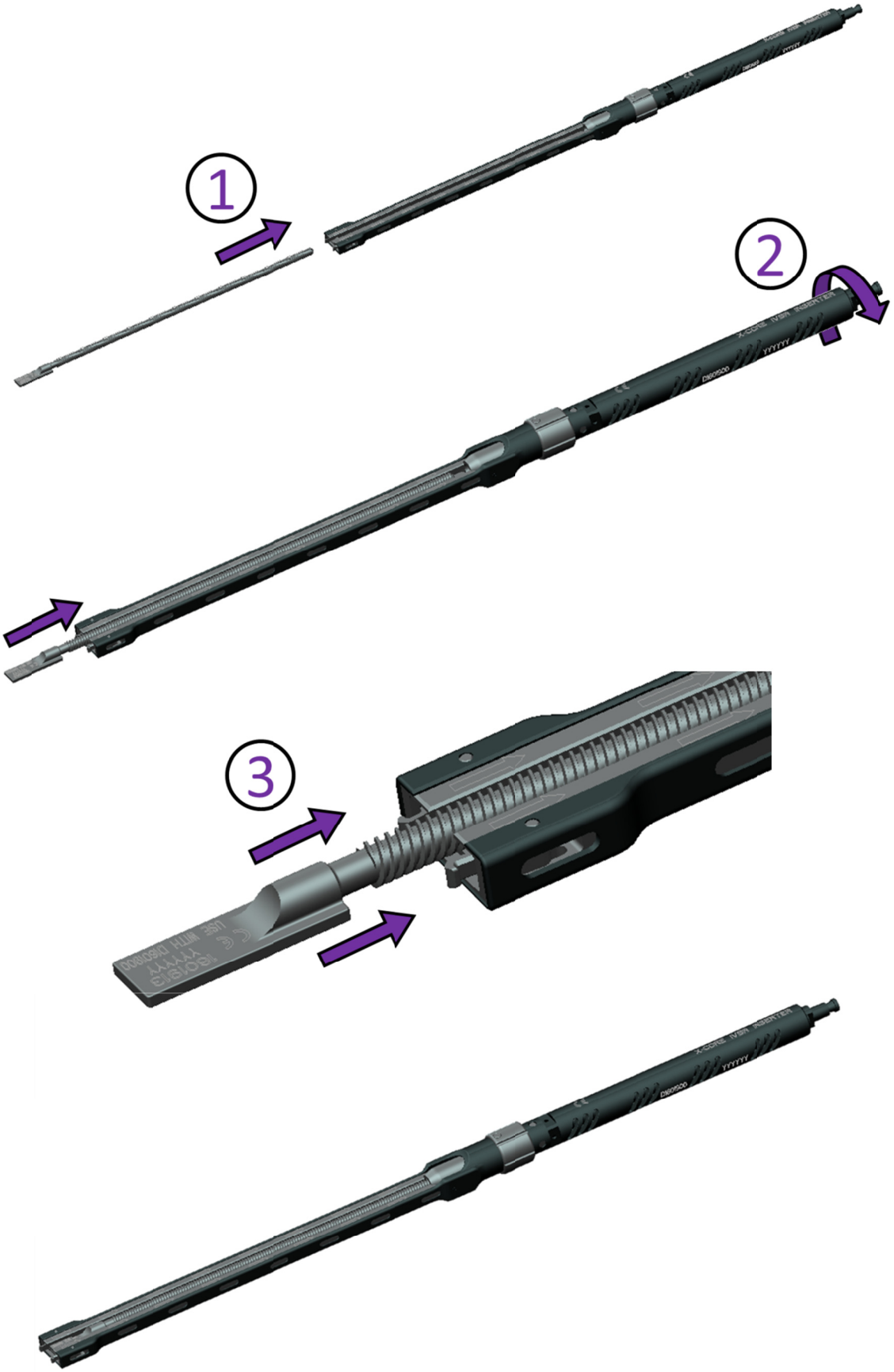
ASSEMBLE/REASSEMBLE:
(ZUSAMMENSETZEN/WIEDER ZUSAMMENSETZEN, MONTER/REMONTER, ΣΥΝΑΡΜΟΛΟΓΗΣΗ/ΕΠΑΝΑΣΥΝΑΡΜΟΛΟΓΗΣΗ, ARMAR/REARMAR, ASSEMBLAGGIO/RIASSEMBLAGGIO, MONTAGEM/DESMONTAGEM, TAKMA /TEKRAR TAKMA)